ST-16-015

Improving Variable-Speed Pumping Control to Maximize Savings

Alexandra Brogan
Student Member ASHRAE

Vijay Gopalakrishnan

Kathleen Sturtevant
Student Member ASHRAE

Zachary Valigosky
Associate Member ASHRAE

Kelly Kissock, PhD, PE
Member ASHRAE

ABSTRACT

According to some estimates, pumps account for between 10% and 20% of world electricity consumption (EERE 2001; Grundfos 2011). Unfortunately, about two-thirds of all pumps use up to 60% too much energy (Grundfos 2011), primarily because of inefficient flow control. Varying pump speed using a variable-frequency drive (VFD) on the pump motor is one of the most efficient methods of flow control. As a consequence, about one-fifth of all U.S. utilities incentivize VFDs (NCSU 2014), and many of these drives control pumping systems.

However, field studies and research show that few variable-flow systems are optimally controlled, and the fraction of actual to ideal savings is frequently as low as 40% (Kissock 2012; Ma et al. 2015; L. Song, Assistant Professor, Department of Mechanical Engineering, University of Oklahoma, pers. comm., July, 2013). Utility incentive programs that rely on ideal energy saving calculations could overestimate savings by 30% (Maxwell 2005).

Previous work has shown the importance of changing motor efficiency, VFD efficiency, and pump efficiency on savings (Bernier and Bourret 1999; Maxwell 2005). This work considers the difference between actual and ideal savings caused by excess bypass flow, positions and setpoints of control sensors, and control algorithms. This paper examines the influence of these factors on energy savings using simulations, experimental data, and field measurements. In general, energy savings are increased when bypass is minimized or eliminated, pressure sensors for control are located near the most remote end use, and the pressure control setpoint is minimized.

INTRODUCTION

According to some estimates, pumps account for between 10% and 20% of world electricity consumption (EERE 2001; Grundfos 2011). In industrial applications, pumps frequently account for 25% of plant energy use (EERE 2001). Unfortunately, about two-thirds of all pumps use up to 60% too much energy (Grundfos 2011). The primary reasons are 1) although pumps are designed for peak flow, most pumping systems seldom require peak flow and 2) the energy efficiency of flow control methods varies significantly. Before variable-frequency drives (VFDs) were commonly used, bypass and throttling were common, but inefficient, methods of varying flow to a specific end use. Today, the most energy efficient method of varying flow is by varying pump speed with a VFD. Previous work has shown that excluding the effects of changing motor efficiency, VFD efficiency, pump efficiency, and static head requirements results in overestimating savings (Bernier and Bourret 1999; Maxwell 2005).

The quantity of energy saved in variable-flow systems is highly dependent on other factors in addition to motor, pump, and VFD efficiencies. Field studies and research show that few variable-flow systems are optimally controlled and that the fraction of actual to maximum savings can be as low as 40% in poorly controlled flow systems (L. Song, Assistant Professor, Department of Mechanical Engineering, University of Oklahoma, pers. comm., July, 2013; Kissock 2012; Ma et al. 2015). This work considers the difference between actual and ideal savings caused by excess bypass flow, positions and setpoints of control sensors, and control algorithms. The paper begins by defining "ideal" flow control as the most energy efficient type of flow control and compares pump power from reducing flow by throttling to the ideal case. Because some

Alexandra Brogan is an energy engineer at Plug Smart, Columbus, OH. **Vijay Gopalakrishnan** is a project engineer at Energy and Resource Solutions, North Andover, MA. **Kathleen Sturtevant** and **Zachary Valigosky** are graduate students in the Renewable and Clean Energy program and **Kelly Kissock** is a professor and chair of the Mechanical and Aerospace Engineering Department and Director of the Renewable and Clean Energy program at the University of Dayton, Dayton, OH.

Published in ASHRAE Transactions, Volume 122, Part 2

minimum flow is required in most pumping systems, the effect of excess bypass flow on pumping energy use is considered. The control variable for most variable-flow pumping systems is pressure; hence, the effect of the locations and setpoint values of pressure sensors on pump power is considered. Finally, a case study is presented that demonstrates how pumping energy can be reduced through application of these principles.

IDEAL FLOW CONTROL

To consider the effects of excess bypass flow, positions and setpoints of pressure sensors, and control algorithms on pumping system energy use, it is useful to define the maximum savings that can be expected from reducing flow. Figure 1 shows two operating points of a pumping system. Point 1 represents the pump operating at full flow. Point 2_V is the operating point if pump speed is slowed by an optimally controlled VFD. Point 2_V lies on a system curve in which the pressure head *dh* approaches zero as volume flow rate $\dot{V}$ approaches zero and pump head varies with the square of volume flow rate. This ideal case represents the minimum pumping power that can be expected when flow is reduced from $\dot{V}_1$ to $\dot{V}_2$. The reduction in pump power is also defined by the pump affinity law shown in Equation 1, where *W* is fluid work and $\dot{V}$ is volume flow rate at respective operating points:

$$W_{2V} = W_1 \times \left(\frac{\dot{V}_2}{\dot{V}_1}\right)^3 \tag{1}$$

Few actual pumping systems achieve the power reduction defined by the pump affinity law because of throttling, minimum flow constraints, static head requirements due to changes in elevation, velocity and pressure between the inlet and outlet of the piping system, and control losses. In the following sections, these deviations from the ideal case are investigated.

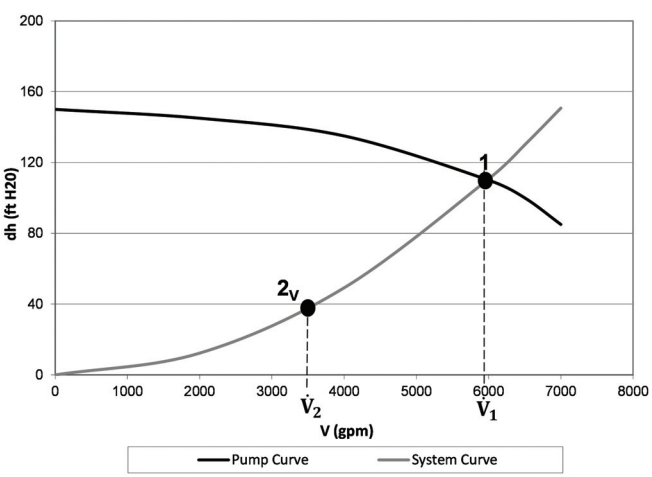

Figure 1 *The ideal system curve approaches zero head at zero flow.*

THROTTLED FLOW CONTROL

One of the most common methods of varying flow is to throttle flow by partially closing a valve in the piping system. In this section, we compare pump power from reducing flow by throttling to pump power from reducing flow by slowing the pump with a VFD. The University of Dayton Hydraulics Lab (UDHL) is equipped with two pumps, a VFD, a parallel piping network with four branches, pressure sensors, and flowmeters. In Figure 2, Point 1 is the operating point with the pump at full flow $\dot{V}_1$. Point 2_T is the operating point when flow was throttled to volume flow rate $\dot{V}_2$. Point 2_V is the operating point when pump speed was slowed by a VFD to volume flow rate $\dot{V}_2$. Pump power is proportional to the product of head and flow, which is represented by the rectangular area defined by each operating point. The data showed that when flow was controlled by throttling at Point 2_T, the pump ran at 1800 rpm (30 Hz) and consumed 8.5 kW. When flow was controlled by the VFD at Point 2_V, the pump ran at 1180 rpm (19.7 Hz) and consumed 3.25 kW; pump power decreased by 62%. Clearly, reducing flow with a VFD is more energy efficient than throttling flow.

In pumping systems, the power transmitted to the fluid W_{fluid} is given by Equation 2, where *dh* is the pressure head across the pump and $\dot{V}$ is the volume flow rate:

$$W_{fluid}\,[\text{kW}] = \frac{dh\,[\text{ft H}_2\text{O}] \times V\,[\text{gpm}]}{3960[\text{gpm}\cdot\text{ft}\cdot\text{H}_2\text{O}/\text{hp}]} \times 0.746\,[\text{kW/hp}] \quad \text{(I-P)} \tag{2}$$

$$\left(W_{fluid}\,[\text{kW}] = \frac{dh\,[\text{m H}_2\text{O}] \times V\,[\text{L/s}]}{76.2[\text{L/s}\cdot\text{m}\cdot\text{H}_2\text{O}/\text{hp}]} \times 0.746\,[\text{kW/hp}]\right) \quad \text{(SI)} \tag{2}$$

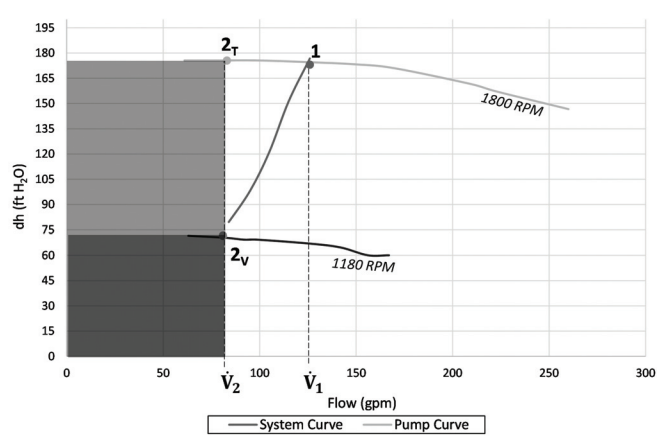

Figure 2 *Measured energy penalty due to throttled flow.*

Published in ASHRAE Transactions, Volume 122, Part 2

At Point 2_V, the fluid work was:

$$W_{fluid}\ [\text{kW}] = \frac{71.6\ \text{ft H}_2\text{O} \times 81\ \text{gpm}}{3960\ \text{gpm·ft·H}_2\text{O/hp}} \times 0.746\ [\text{kW/hp}] = 1.09\ \text{kW}$$

$$\left(W_{fluid}\ [\text{kW}] = \frac{21.8\ \text{m H}_2\text{O} \times 5.1\ \text{L/s}}{76.2\ \text{L/s·m·H}_2\text{O/hp}} \times 0.746\ [\text{kW/hp}] = 1.09\ \text{kW} \right)$$

However, the electrical power to the pump motor is always greater than fluid work because of efficiency losses in the motor, pump, and VFD. Using the measured power draw and calculated fluid work, the combined efficiency, $\eta_{combined}$, is given by Equation 3:

$$\eta_{combined} = \frac{W_{fluid}\ [\text{kW}]}{P\ [\text{kW}]} \tag{3}$$

At Point 2_V, the combined efficiency was:

$$\eta_{combined} = \frac{1.09\ \text{kW}}{3.25\ \text{kW}} \times 100\% = 34\%$$

The combined efficiencies at Points 2_T and 2_V were 32% and 34%, respectively. These results indicate that about 70% of pump power was lost due to inefficiencies in the motor, pump, and VFD.

BYPASS FLOW CONTROL

Minimum Flow Requirements

Pumping systems require some minimum flow due to constraints such as minimum VFD speed, minimum flow through the pump, or minimum flow through equipment such as a chiller evaporator. Hence, a bypass is needed to provide a path for minimum flow when end uses reduce flow below this minimum. In the ideal case, no bypass flow is permitted when end uses require more than minimum flow. Flow in excess of the minimum required flow increases pumping power and wastes energy.

Excess Bypass Flow

Flow in excess of the minimum required flow always wastes pumping energy. Three common piping systems that result in excess bypass flow are shown in Figure 3. The first is a three-way valve at one or more end uses (Figure 3A). Three-way valves always allow some bypass flow, thus wasting pumping energy. Another piping system that allows excess bypass flow uses a manually controlled bypass valve (Figure 3B). Manually controlled valves are always at least partially open and hence allow bypass flow even when no bypass is required. The recommended commissioning practice in a system with a manually controlled bypass valve is to close all end-use loads and throttle to allow minimum required flow (Kelley, J., Energy Engineer, Plug Smart, LLC, E, pers. comm., February 2015). However, when end-use valves close, flow through the bypass valve increases due to rebalancing of flow, allowing more than minimum flow through the bypass. (Rebalancing of flow is shown experimentally by the difference in flows $\dot{V}_{2TO}$ and $\dot{V}_{2VO}$ in Figure 5.) In industrial systems, manually controlled bypass valves are often neglected after installation and allow unmonitored excess bypass flow. A third common piping system that allows excess bypass flow uses an automatic flow limiter on the bypass pipe (Figure 3C). Automatic flow limiters are better than manually controlled valves because they prevent rebalancing of flow. However, they still allow a fixed amount of bypass flow when no bypass is required, resulting in wasted pumping energy.

Ideal Bypass Flow Control

Ideal bypass flow control is achieved with a dedicated, actuated two-way bypass valve controlled to eliminate bypass flow when end uses require more than the minimum flow constraint and to allow minimum bypass flow when end uses require less than the minimum flow constraint (Avery and Richel 2009). Examples of ideal chilled-water system bypass flow control are shown in Figure 4: the first is a primary-only pumping system and the second is a primary-secondary pumping system. In the primary-only system (Figure 4A), the minimum flow constraint is flow through the chiller evaporator. The bypass valve opens based on a flowmeter on the return header (Taylor 2012) or the pressure

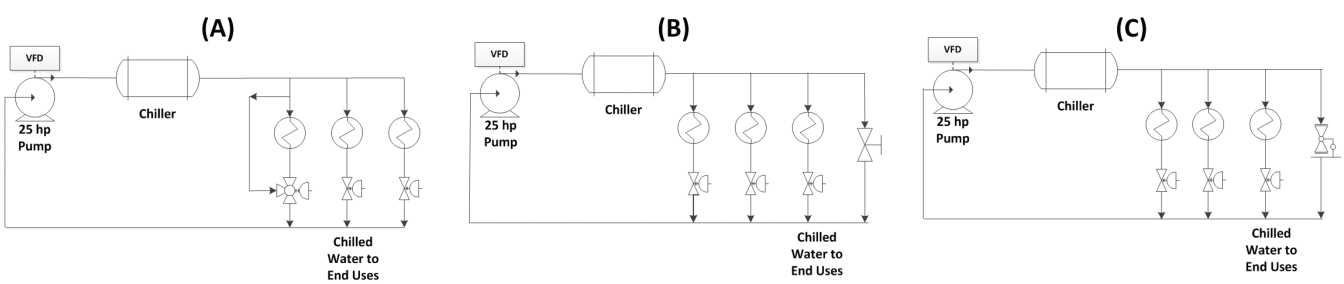

Figure 3 *(A) Three-way bypass valve at one end use, (B) manually controlled bypass valve, and (C) automatic flow limiter bypass valve.*

Published in ASHRAE Transactions, Volume 122, Part 2

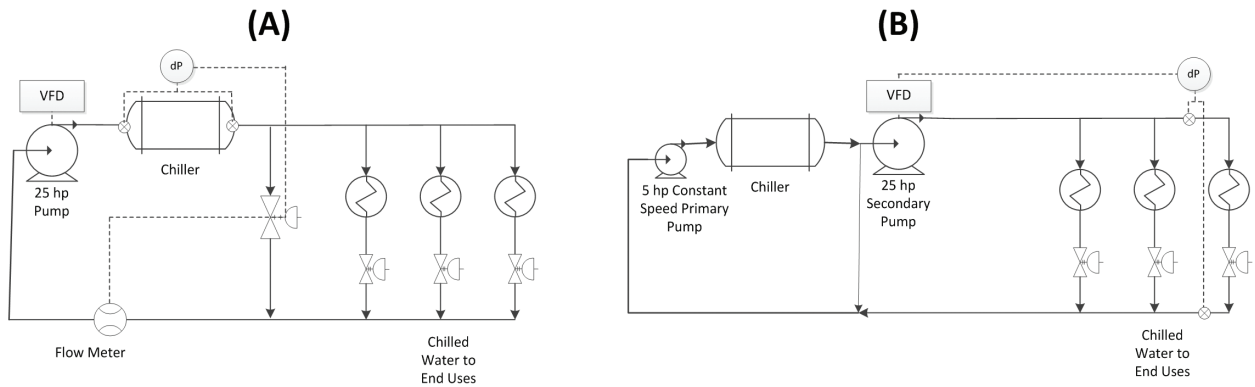

Figure 4 *(A) In a primary-only system, the bypass can be controlled by a flowmeter or a differential pressure sensor; (B) a primary-secondary system eliminates the need for a bypass valve.*

difference through the chiller evaporator (Fauber, J., Senior Mechanical Engineer, Heapy Engineering, E, pers. comm., May 2015) when end uses require less than minimum flow. The bypass valve is closed when the end uses require more than minimum flow.

In the primary-secondary system (Figure 4B), a constant-speed primary pump provides minimum flow to the chiller, which eliminates the need for a bypass valve by maintaining minimum flow through the chiller evaporator (Taylor 2002). The secondary pump provides flow to end uses.

Primary-only pumping systems always use less energy and have a lower first cost than primary-secondary systems (Taylor 2002). However, primary-only systems are complicated to commission and difficult for facilities without constant personnel support to maintain them (Taylor 2002). Primary-secondary pumping systems provide minimum flow with smaller, primary pumps while allowing larger, secondary pumps to vary flow with a VFD, as shown in Figure 4B.

Savings from Eliminating Excess Bypass Flow

The effect of excess bypass flow on energy savings in variable-flow pumping systems was experimentally measured in the UDHL. In this experiment, flow through "the process" end use was 81 gpm (5.1 L/s) with the manually controlled bypass valve closed. Next, flow through "the process" end use was maintained at 81 gpm (5.1 L/s) with the bypass valve about 50% open. Figure 5 shows that with the bypass valve closed, the VFD ran at 1180 rpm (19.7 Hz), total flow was 81 gpm (5.1 L/s), and the operating point is 2_{VC}. With the bypass valve 50% open, the VFD ran at 1212 rpm (20.2 Hz), total flow was 134 gpm (8.4 L/s), and the operating point shifted to 2_{VO}. Because flow through the process end use was maintained at 81 gpm (5.1 L/s), 53 gpm (3.3 L/s) traveled through the bypass loop. In this case, pump power increased from 3.25 to 4.12 kW, or about 27%. When the manually controlled bypass valve was fully open, pump power increased by 54%. This indicates that if the effect of

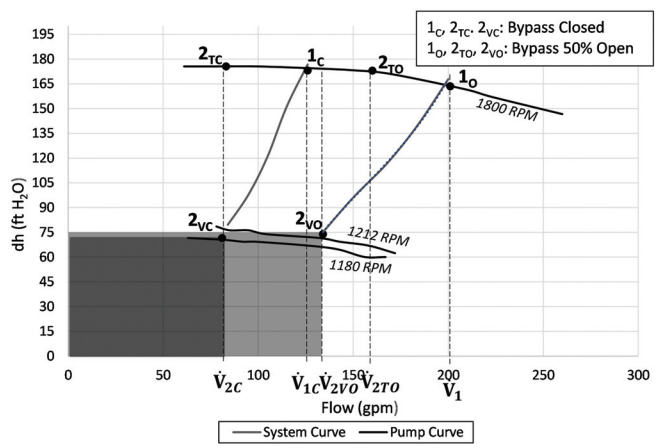

Figure 5 *Measured energy penalty associated with bypass 50% open.*

excess bypass flow is neglected in savings calculations, those calculations will significantly overestimate savings. These results also suggest that savings can be significantly increased by minimizing excess bypass.

PUMP SPEED CONTROL

Automatically controlled VFDs modulate pump speed based on data from a control variable; the most common control variable is pressure. The setpoint pressure determines the *y*-intercept of the system curve; hence, a high pressure setpoint increases pump power at all flows. This concept is demonstrated in Figure 6. The rectangle defined by Point 2_{V80} represents pump power when the pressure setpoint value is 80 ft H_2O (24.4 m H_2O). The rectangle defined by Point 2_{V40} represents pump power when the pressure setpoint value is 40 ft H_2O (12.2 m H_2O). The difference in the size of the rectangles represents the additional energy associated with setting the ΔP at 80 ft H_2O (24.4 m H_2O) compared to setting it at 40 ft H_2O (12.2 m H_2O).

Published in ASHRAE Transactions, Volume 122, Part 2

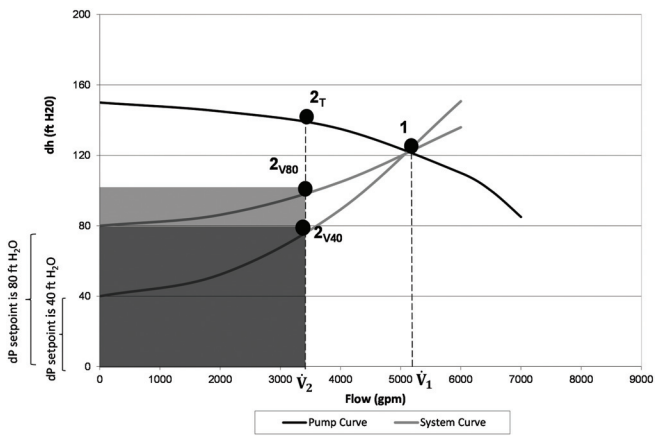

Figure 6 *Additional energy associated with a higher ΔP setpoint is represented by the difference in the rectangles.*

The setpoint pressure must be large enough to push fluid through the end uses and hence depends on the location of the sensor in relation to the pump and end uses. Figure 7A shows a closed-loop chilled-water system with a sensor measuring pressure at the discharge of the pump. At this location, the pressure setpoint has to be high enough to push fluid from Point 2 through the end uses, through the chiller, and back to the pump at Point 2. Thus, controlling the VFD based on pump discharge pressure results in a high setpoint and increased energy use.

Figure 7B shows a closed-loop chilled-water system with two sensors—one in the supply header and one in the return header to determine differential pressure. At this location, the differential pressure setpoint has to be high enough to push fluid from Point 2 through the supply header, through the most remote end use, and back to Point 3 through the return header.

Figure 7C shows a closed-loop chilled-water system with two sensors located near the most remote end use—one sensor in the supply header and a second sensor in the return header—

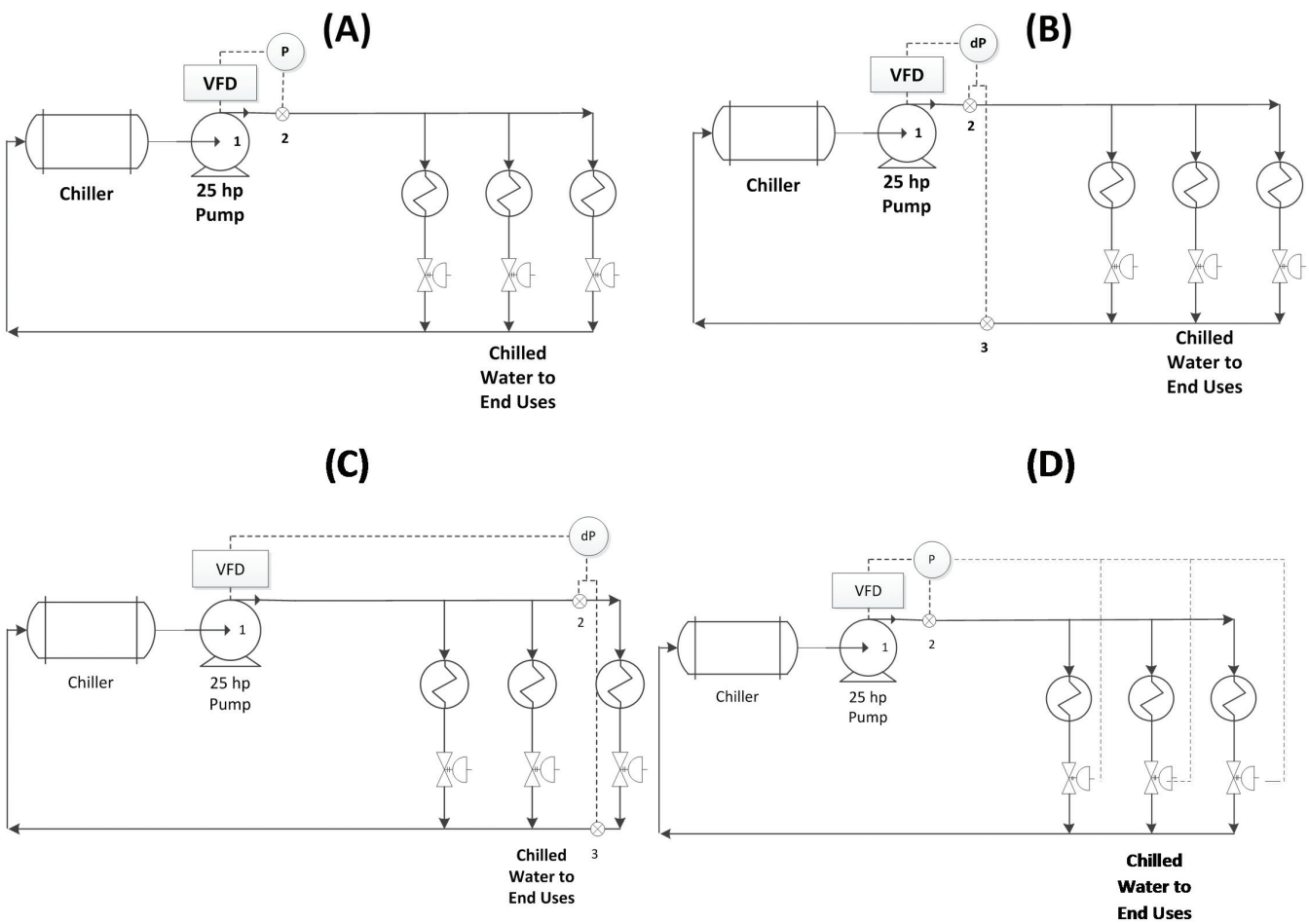

Figure 7 *Closed-loop chilled-water system with (A) pressure sensor at pump discharge, (B) pressure sensor at pump discharge and in return header measuring differential pressure between the supply and return headers, (C) pressure sensors located near most remote end use measuring differential pressure between the supply and return headers, and (D) pressure sensor at pump discharge controlled by valve position.*

to determine differential pressure at the most remote end use. At this location, the differential pressure setpoint would only have to be high enough to push fluid through the most remote end use. Thus, controlling the VFD based on the differential pressure near the most remote end use results in a lower setpoint pressure and reduced energy use. This method assumes equal flow through all end uses. Locating a differential pressure sensor at the most remote location is recommended by ASHRAE/IES Standard 90.1 (ASHRAE 2013).

Figure 7D shows a closed-loop chilled-water system with a sensor measuring pressure at the discharge of the pump; however, the setpoint pressure is dynamically reset based on valve position control. In valve position control, the pressure setpoint, and hence VFD speed, decreases until at least one valve is almost fully open. Thus, valve position control supplies the required flow, at minimum pressure, without starving any end uses.

System head *dh* at various flow rates *V* was simulated for the four systems shown in Figure 7 to illustrate the effect of pressure sensor location on energy use. Figure 8 shows that the least energy efficient method of control is a pressure sensor located at the pump discharge (see Figure7A). Energy efficiency improves when a differential pressure sensor is located at an intermediate end use (see Figure7B). Energy efficiency further improves when a differential pressure sensor is located at the most remote end use (see Figure7C). Finally, the most energy efficient method of control is differential pressure reset based on valve position (see Figure7D).

CASE STUDY

This case study demonstrates energy savings by improving the pressure control algorithm. An initial inspection indicates that the variable-flow HVAC chilled-water system shown in Figure 9 employs several best practices. A differential pressure sensor is located near the most remote end use. In addition, the pressure sensors across the chiller evaporators can be used to measure flow through the evaporators to ensure minimum flow. The use of reverse-return balances unregulated flow through the air handlers (Taylor 2002). And bypass flow is minimized by the use of a single (rather than multiple) three-way bypass valve.

Despite the existence of VFDs and well-located pressure sensors, data from the control system indicate nonoptimal control. As shown in Figure 10A, the VFD operated at an average speed of 70% on Saturday, May 10, when the average outdoor air temperature was 65.5°F (18.6°C), the average relative humidity was 70%, and occupancy and internal loads were small. As shown in Figure 10B, the VFD operated at an average speed of 64% on Thursday, July 10, when the average outdoor air temperature was 70.7°F (21.5°C),[1] the average

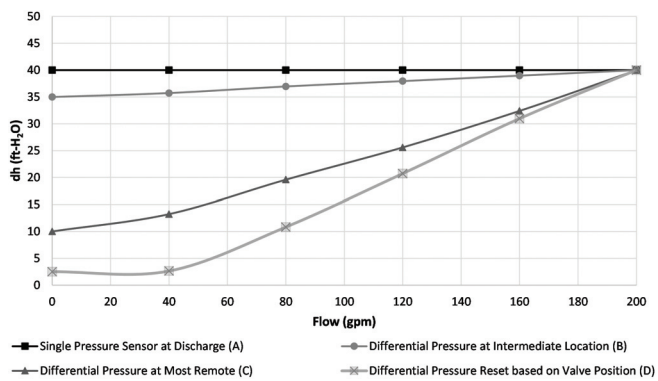

Figure 8 *Effect of pressure sensor options on energy use demonstrated through system curve comparison.*

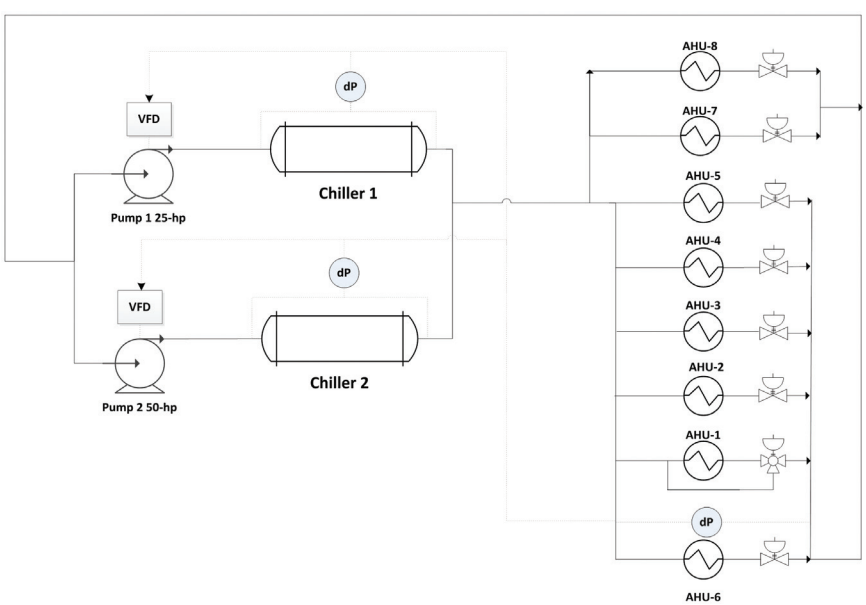

Figure 9 *Chilled-water pumping system in case study.*

Published in ASHRAE Transactions, Volume 122, Part 2

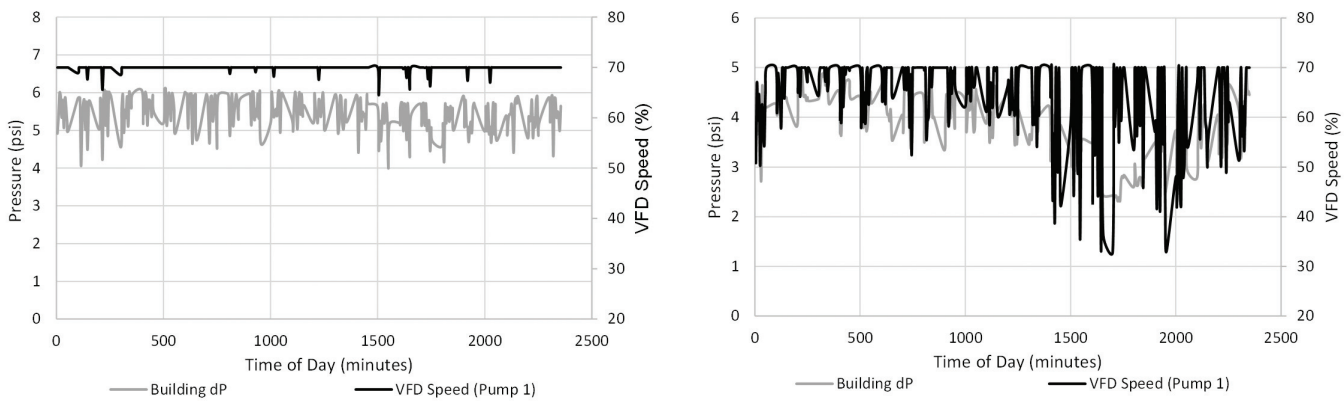

Figure 10 *Trend data on (A) Saturday, May 10, 2014, and (B) Thursday, July 10, 2014.*

relative humidity was 66%,[2] and occupancy and internal loads were similar to those of May 10. If properly controlled, the VFD speed would be higher on a hotter, wetter day. However, the VFD speed is stuck at 70% on May 10 and drops to 30% on July 10, which indicates inefficient control.

The original control algorithm executes the following steps:

1. Chiller 1 and Pump 1 turn on when the outdoor air temperature is above 65°F (18.°C).
2. Differential pressure is read across the building and Chiller 1 evaporator:
   - The Chiller 1 evaporator ΔP must be maintained between 1.5 and 6.4 psi (10.3 and 44.1 kPa) to meet the minimum flow constraint. If it is higher or lower, the VFD ramps up or down to maintain the upper and lower bounds.
   - The building ΔP setpoint is 10 psi (68.9 kPa). The VFD simultaneously ramps up or down to maintain 10 psi (68.9 kPa) across the building.
3. If the building ΔP drops below 2.3 psi (15.9 kPa) for 30 minutes, Pump 2 turns on to increase building pressure.
4. If the chilled-water supply temperature is greater than 48°F (8.9°C), Chiller 2 and Pump 2 come on to provide more cooling capacity to the building.
   - When Pump 2 operates, the building ΔP setpoint is 20 psi (137.9 kPa) and the Chiller 2 evaporator ΔP must be maintained between 2.8 and 15 psi. (19.3 and 103.4 kPa). Pump 2 operates as Pump 1 with these aforementioned setpoints.

Because of the 6.4 psi (44.1 kPa) upper bound on Chiller 1 evaporator ΔP, the VFD was always hunting for, but never reached, the building ΔP setpoint of 10 psi (68.9 kPa) when Pump 1 operated. Similarly, when Pump 2 operated, the building ΔP setpoint was excessively high. To reduce pumping energy, the building ΔP setpoints were reduced closer to the minimum flow constraints. The building ΔP setpoint for Pump 1 was reduced incrementally from 10 psi (68.9 kPa) to 7 psi (48.3 kPa) on June 24, 2015, to 4 psi (27.6 kPa) on July 1, 2015, and finally, to 3 psi (20.7 kPa) on July 15, 2015. The building ΔP setpoint for Pump 2 was reduced from 20 to 10 psi (137.9 to 68.9 kPa) on July 2, 2015, and from 10 to 5 psi (68.9 to 34.5 kPa) on July 15, 2015.

Flow-normalized energy savings are shown Figure 11. For both Pump 1 and Pump 2, power use was less at the same flow after the control changes. Power draw was reduced by 6% from reducing the building ΔP setpoint to 3 psi (20.7 kPa) when Pump 1 operates and by 17% from reducing the building ΔP setpoint to 5 psi (34.5 kPa) when Pump 2 operates.

Further recommendations for this system include replacing the system's three-way bypass valve with an actuated two-way bypass valve controlled to provide a minimum pressure drop, and hence flow, across the chiller evaporator. We are also investigating optimized chiller sequencing and building pressure reset based on end-use valve position.

CONCLUSION

This paper describes several best practices for controlling variable-flow pumping systems. As variable-flow pumping systems become more common, adhering to these best practices is important in order to maximize energy savings. In our experience, many variable-flow pumping systems are not optimally controlled, so the potential for savings is great.

To maximize energy savings in variable-flow pumping systems, bypass flow should be minimized or eliminated. Best practice to eliminate excess bypass flow is to use an actuated

1. Average daily temperatures for Dayton, OH, were taken from University of Dayton's Average Daily Temperature Archive: http://academic.udayton.edu/kissock/http/Weather/.
2. Relative humidity data for Dayton, OH, taken from Weather Underground: http://www.wunderground.com.

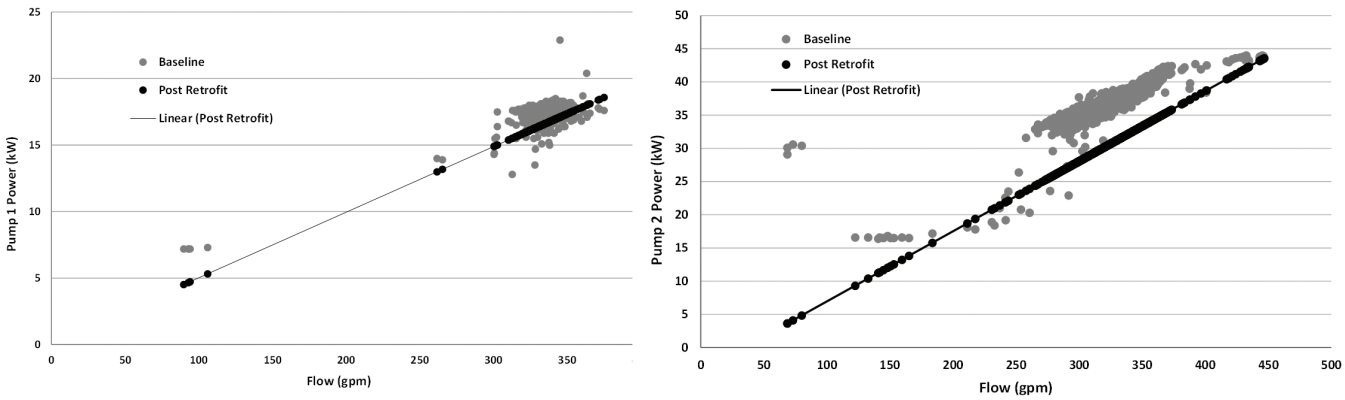

(A) **(B)**

Figure 11 *Power draw versus flow rate for (A) Pump 1 and (B) Pump 2.*

two-way bypass valve or primary-secondary pumping. If the effect of excess bypass is neglected, savings calculations will significantly be overestimated.

Best practice in controlling VFD speed is locating a differential pressure sensor near the most remote end use in the system. To increase energy savings, the ΔP setpoint should be as low as possible. Further, valve position can be used to reset the differential pressure setpoint downward to allow static head to approach zero and maximize energy savings.

ACKNOWLEDGMENTS

We are grateful for support for this work from the U.S. Department of Energy through the Industrial Assessment Center program and through an Excellence in Applied Energy Engineering Research grant. We are very grateful to Steve Kendig and John Brammer for providing access to and information about the chilled-water pumping system and for helping us develop an improved algorithm. We are grateful to Don Chase and Bernard Glascoe for assisting us in the UDHL. Jeremy Fauber provided technical suggestions. We are also grateful to Andrew Chiasson for his guidance. Finally, we are grateful to the University of Dayton Industrial Assessment Center students and staff upon whose work this effort is built.

REFERENCES

ASHRAE. 2013. ANSI/ASHRAE/IES Standard 90.1-2010, *Energy standard for buildings except low-rise residential buildings*. Atlanta: ASHRAE.

Avery, G., and J.B. Rishel. 2009. Case against balancing valves. *ASHRAE Journal*, July, pp. 26–29.

Bernier, M.A., and B. Bourret. 1999. Pumping energy and variable frequency drives. *ASHRAE Journal*, December.

EERE. 2001. *Pump life cycle costs: A guide to LCC analysis for pumping systems.* Washington, DC: U.S. Department of Energy, Energy Efficiency and Renewable Energy. www1.eere.energy.gov/manufacturing/tech_assistance/pdfs/pumplcc_1001.pdf.

Grundfos. 2011. *All you need to know about pumps and energy.* Bjerringbro, Denmark: Grundfos Management. http://energy.grundfos.com/en/facts-on-pumps-energy/energy-and-pump-facts.

Kissock, K. 2012. Energy efficient buildings. Section on commercial building air systems: Duct/fan system design, constant and variable air volume systems [Course materials online]. Dayton, OH: University of Dayton. http://academic.udayton.edu/kissock/http/EEB/Energy%20Efficient%20Buildings_1.htm.

Ma, Y., A. Tukur, and K. Kissock. 2015. Energy efficient static pressure reset in VAV systems. *ASHRAE Transactions* 121(1).

Maxwell, J. 2005. How to avoid overestimating variable speed drive savings. Presented at the Industrial Energy Technology Conference, New Orleans, LA, May.

NCSU. 2014. DSIRE® (Database of State Incentives for Renewables & Energy Efficiency). Raleigh, NC: North Carolina State University, N.C. Clean Energy Technology Center. www.dsireusa.org.

Taylor, S. 2002. Primary-only vs. primary-secondary variable flow systems. *ASHRAE Journal*, February.

Taylor, S. 2012. Optimizing design and control of chilled water plants, Part 5: Optimized control sequences. *ASHRAE Journal*, June.